Model No.CS004G 150MM CORDLESS METAL CUTTER

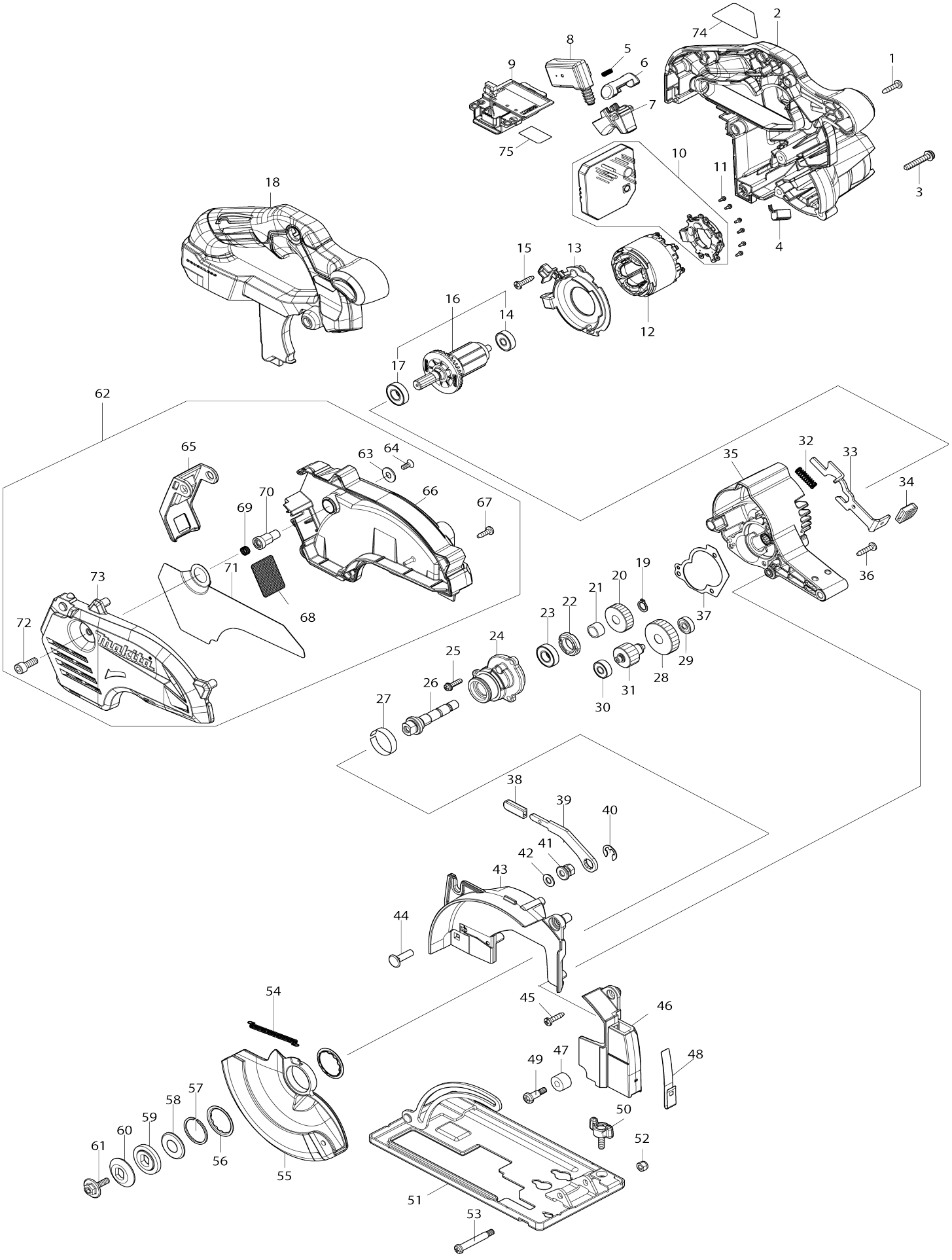

Model No.CS004G 150MM CORDLESS METAL CUTTER

Item No.	Parts No.	Description	Interchangeability	Q'ty	New/ Old	Note1	Note2
001	265995-6	Binding head tapping screw 4X18		7			
002	1832R4-6	MOTOR HOUSING SET		1			
C10	263005-3	Rubber pin 6		2			
002		INC. 18					
003	911253-5	Pan head screw M5X30 WR		3			
004	620T57-1	LED circuit		1			
005	231433-0	Compression spring 4		1			
006	459264-7	Lock off button		1			
007	413N46-5	Switch lever		1			
008	650039-9	Switch C3XB-1LPSPM		1			
009	632P65-6	Terminal unit		1			
010	620T43-2	Controller		1			
011	652119-7	Pan head screw M2X6		6			
012	629D27-1	Stator		1			
013	4134X2-3	Baffle plate		1			
014	210022-4	Ball bearing 626DDW		1			
015	265995-6	Binding head tapping screw 4X18		2			
016	510436-0	Rotor assembly		1			
016		INC. 14,17					
017	210214-5	Ball bearing 6900DDW		1			
018	1832R4-6	MOTOR HOUSING SET		1			
C10	263005-3	Rubber pin 6		2			
018		INC. 2					
019	961005-4	Retaining ring (EXT) S-9		1			
020	227808-9	Helical gear 24		1			
021	257728-3	Sleeve 10		1			
022	285847-5	Bearing retainer 14-23		1			
023	210214-5	Ball bearing 6900DDW		1			
024	137489-0	BEARING BOX ASSY		1			
C10	263002-9	Rubber pin 4		1			
025	911128-8	Pan head screw M4X16 WR		3			
026	326540-3	Spindle		1			
027	345470-9	Thickness ring		1			
028	227809-7	Helical gear 30		1			
029	210231-5	Ball bearing 625ZZ		1			
030	211012-0	Ball bearing 606ZZ		1			
031	227807-1	Helical gear 17		1			
032	233117-6	Compression spring 6		1			
033	346885-3	Shaft lock		1			
034	286039-9	Cap		1			
035	1412V6-6	Gear housing complete		1			
036	265995-6	Binding head tapping screw 4X18		3			
037	424715-9	Gasket		1			
038	286036-5	Cap		1			
039	347418-7	Lever plate		1			

040	257982-9	Bow stop ring (EXT) E-8		1			
041	252265-2	Hex. nut M6		1			
042	941151-9	Flat washer 6		1			
043	4134X4-9	Blade case		1			
044	266737-1	Flat head square neck bolt M6X20		1			
045	265995-6	Binding head tapping screw 4X18		1			
046	4134X3-1	Blade cover		1			
047	262511-5	Rubber sleeve 6		1			
048	347E81-6	Guard plate		1			
049	265115-2	Pan head shoulder screw M5X19		1			
050	265761-1	Thumb screw M5X16		1			
051	162E43-1	Base		1			
052	252103-8	Hex. lock nut M5-8		1			
053	265056-2	Pan head shoulder screw M5		1			
054	231792-2	Tension spring 3		1			
055	140C92-6	Safety cover complete		1			
056	345739-1	Spacer		2			
057	257938-2	Retaining ring (EXT) WR-26		1			
058	267802-9	Cup washer 13		1			
059	224391-7	Inner flange 30		1			
060	224404-4	Outer flange 30		1			
061	266458-5	Hex. socket hex. head flange bolt M6X18		1			
062	122L33-8	DUST BOX ASSEMBLY		1			
062		INC. 63-73					
063	347577-7	Washer 6		1			
064	265135-6	Countersunk head screw M4X10		1			
065	413J78-8	Dust cap		1			
066	4134X5-7	Dust box L		1			
067	266192-7	Binding head tapping screw 4X14		4			
068	347A18-9	Punching plate		1			
069	232690-3	Compression spring 7		1			
070	327G84-8	FIX NUT		1			
071	347E80-8	Inner plate		1			
072	265F16-0	HEX. SOCKET HEAD BOLT M6X16		1			
073	4134X6-5	Dust box R		1			
074	8157E0-2	CS004G NAME PLATE		1			
075	8157E1-0	CS004G SERIAL NO. LABEL		1			
A01	164095-8	Guide rule		1			
A02	B-69325	TCT BLADE150X33T EFFICUT METAL		1			
A03	783203-8	Hex. wrench 5		1			
F02	1918H5-6	Dust cap set		1			
F03	199296-9	Hook set		1			
F04	1918P3-6	GUIDE RULE SET		1			