Model No.DFR452 CORDLESS AUTO FEED SCREWDRIVER

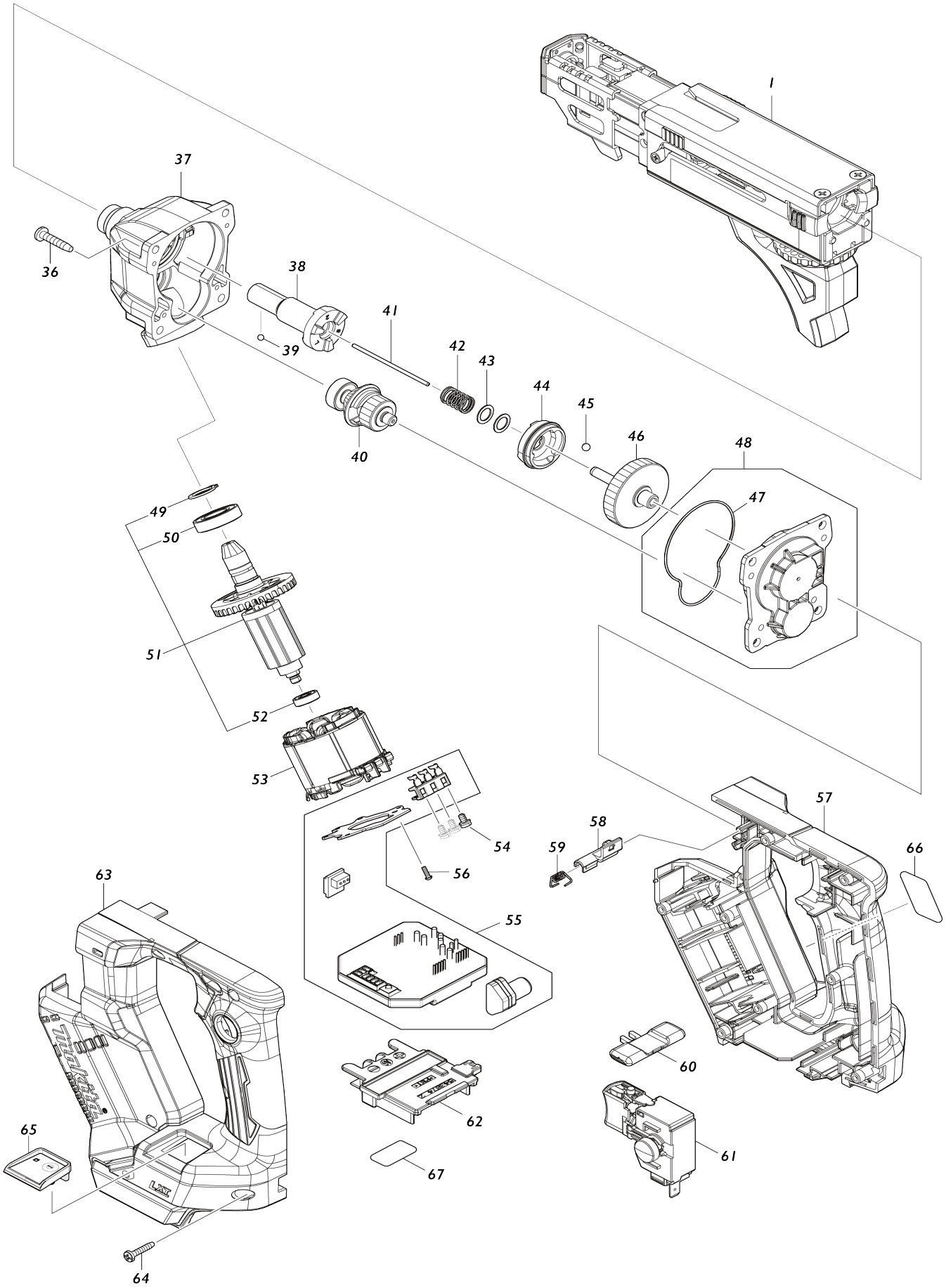

Model No.DFR452 CORDLESS AUTO FEED SCREWDRIVER

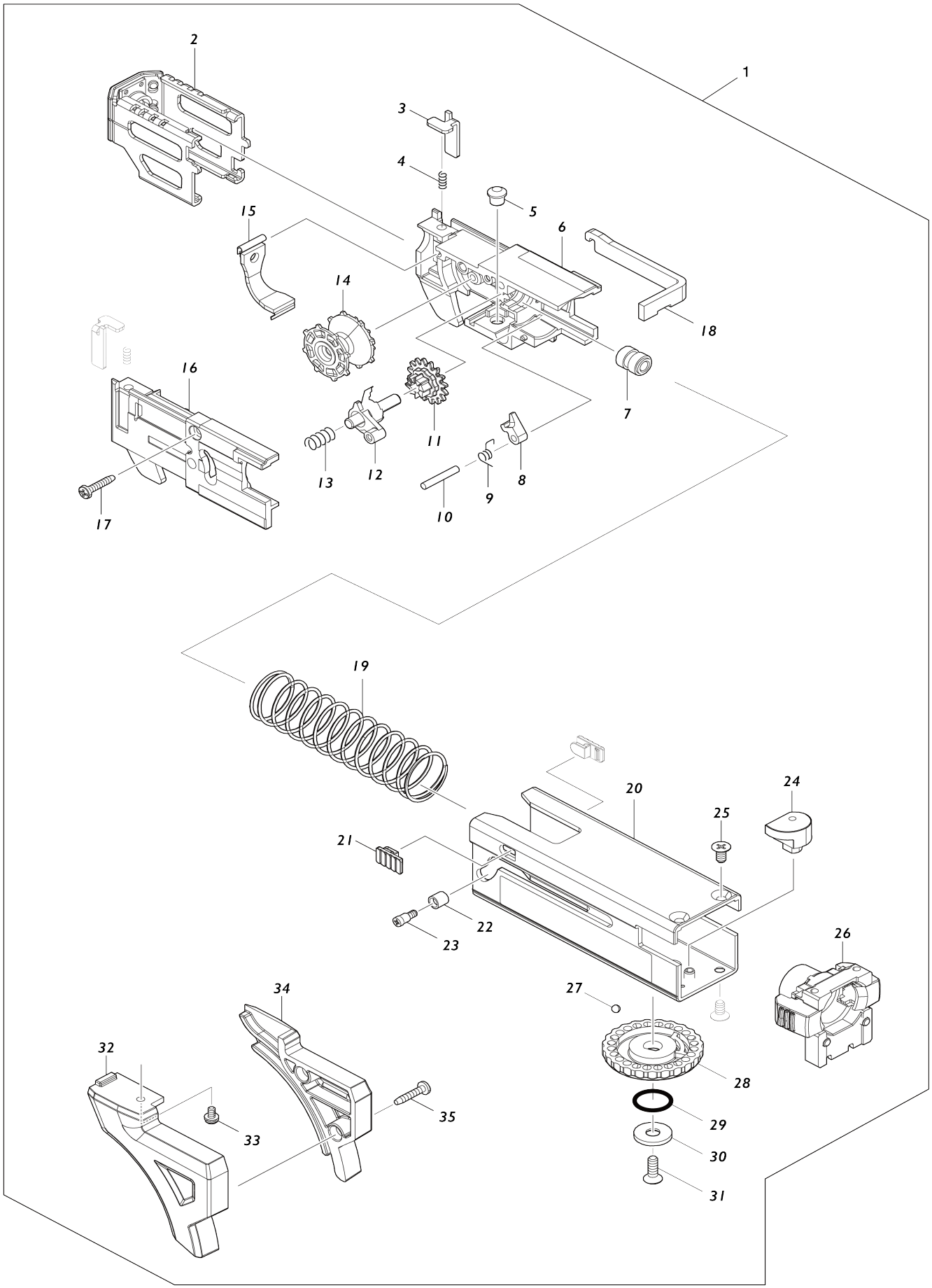

Model No.DFR452 CORDLESS AUTO FEED SCREWDRIVER

Item No.	Parts No.	Description	Interchangeability	Q'ty	New/ Old	Note1	Note2
001	191W93-7	CASING 41 SET		1	*		
001		INC. 2-35			*		
001		INC. 2-35,68			*		
001-1	191W93-7	CASING 41 SET	O	1	*		
001-1		INC. 2-35,68			*		
001-2	1915G8-5	CASING 41 SET	O	1			
001-2		INC. 2-35,68					
002	141A76-5	STOPPER BASE COMPLETE		1	*		
C10	422695-3	CAP		1	*		
002-1	1410Y5-7	STOPPER BASE COMPLETE	O	1			
C10	422695-3	CAP		1			
003	345837-1	LEVER		2			
004	233211-4	COMPRESSION SPRING 2		2			
005	256451-7	PIN 6		1			
006	413525-9	FEEDER BOX		1			
007	257855-6	SLEEVE 5		1			
008	310062-3	STOPPER		1			
009	231636-6	TORSION SPRING 4		1			
010	256158-5	PIN 3		1			
011	226344-2	SPUR GEAR 16		1			
012	141A78-1	RATCHET ARM COMPLETE		1			
013	233212-2	COMPRESSION SPRING 6		1	*		
013-1	232771-3	COMPRESSION SPRING 5	<	1			
014	416518-5	WHEEL		1			
015	162934-6	DUST COVER		1			
016	141A75-7	BOX COVER COMPLETE		1	*		
016-1	141A75-7	BOX COVER COMPLETE	S	1			
017	266130-9	TAPPING SCREW BIND PT 3X16		1			
018	347825-4	PLATE		1			
019	232696-1	COMPRESSION SPRING 21		1			
020	141A74-9	CASING 41 COMPLETE		1	*		
C10	8040Y5-5	INDICATION LABEL		1	*		
020-1	141A74-9	CASING 41 COMPLETE	S	1			
C10	8040Y5-5	INDICATION LABEL		1			
021	450111-5	STOPPER		2			
022	257764-9	SLEEVE 4		1			
023	265177-0	+SHOULDER FLAT HEAD SCREW M3X5		1			
024	313378-5	SHIFTER PIN		1			
025	912107-9	COUNTERSUNK HEAD SCREW M4 X8		3			
026	141A77-3	CLAMPER COMPLETE		1			
C10	263032-0	RUBBER PIN 4		2			
027	216001-0	STEEL BALL 3.5		1			
028	417056-0	DIAL 42		1			
029	213107-5	O RING 12		1			
030	267201-5	FLAT WASHER 6		1			
031	912117-6	COUNTERSUNK HEAD SCREW M4		1			

		X12					
032	183T81-0	SCREW GUIDE SET		1	*		
032		INC. 34			*		
032-1	413A56-4	SCREW GUIDE L	S	1	*		
032-1		INC. 34			*		
032-2	4132A6-2	SCREW GUIDE L	S	1			
033	265A38-0	P.H.SCREW M3X6 WITH WR		1			
034	183T81-0	SCREW GUIDE SET		1	*		
034		INC. 32			*		
034-1	413A57-2	SCREW GUIDE R	S	1	*		
034-1		INC. 32			*		
034-2	4132A7-0	SCREW GUIDE R	S	1			
035	266130-9	TAPPING SCREW BIND PT 3X16		2			
036	266045-0	TAPPING SCREW 4X20		4			
037	141A64-2	GEAR HOUSING COMPLETE		1			
C10	213265-7	O RING 17		1			
C20	213380-7	O RING 24		1			
038	141A67-6	SPINDLE 270S COMPLETE		1	*		
038-1	1411T1-6	SPINDLE 270S COMPLETE	O	1			
039	216019-1	STEEL BALL 3		1			
040	141J99-7	GEAR COMPLETE 21-25		1			
041	268325-0	ROD 2		1			
042	234121-8	COMPRESSION SPRING 8		1			
043	267202-3	FLAT WASHER 8		2			
044	223192-0	CLUTCH CAM 270S		1			
045	216008-6	STEEL BALL 4		3			
046	141A63-4	GEAR COMPLETE 46		1			
047	422692-9	SEAL RING		1			
048	136412-2	GEAR HOUSING COVER ASSY		1			
C10	422694-5	FELT		1			
048		INC. 47					
049	961052-5	RETAINING RING (EXT) S-12		1			
050	211288-9	BALL BEARING 6901DDW		1			
051	519685-6	ROTOR ASSY		1	*		
051		INC. 49,50,52			*		
051-1	519686-4	ROTOR ASS'Y	O	1			
051-1		INC. 49,50,52					
052	210039-7	BALL BEARING 695DDW		1			
053	629A57-4	STATOR		1			
054	652069-6	FLAT HEAD SCREW M3X6		3			
055	620E75-9	CONTROLLER		1			
056	266490-9	TAPPING SCREW PT 2X6		3			
057	183T80-2	HOUSING SET		1	*		
C10	263005-3	RUBBER PIN 6		2	*		
C20	252126-6	HEX. LOCK NUT M4-7		2	*		
057		INC. 63			*		
057-1	183W94-9	HOUSING SET	S	1			
C10	263005-3	RUBBER PIN 6		2			
C20	252126-6	HEX. LOCK NUT M4-7		2			
057-1		INC. 63					
058	141A65-0	LEVER COMPLETE		1			
059	232703-0	TORSION SPRING 3		1			

060	455053-8	F/R CHANGE LEVER		1			
061	651088-9	SWITCH C3JW-4B-1L		1			
062	643874-2	TERMINAL		1			
063	183T80-2	HOUSING SET		1	*		
C10	263005-3	RUBBER PIN 6		2	*		
C20	252126-6	HEX. LOCK NUT M4-7		2	*		
063		INC. 57			*		
063-1	183W94-9	HOUSING SET	S	1			
C10	263005-3	RUBBER PIN 6		2			
C20	252126-6	HEX. LOCK NUT M4-7		2			
063-1		INC. 57					
064	266130-9	TAPPING SCREW BIND PT 3X16		8			
065	141G67-2	SWITCH PLATE COMPLETE		1	*		
C10	8031T5-3	SWITCH LABEL		1	*		
065-1	141L34-7	SWITCH PLATE COMPLETE	S	1			
C10	8031T5-3	SWITCH LABEL		1			
066	8110H0-9	DFR452 NAME PLATE		1			
067	8110H4-1	DFR452 SERIAL NO. LABEL		1			
068	253309-1	THIN WASHER 8		1			
069	808576-9	6000RPM INDICATION LABEL		1			
A01	266622-8	+ TRUSS HEAD SCREW M4X12		1			
A02	346317-0	HOOK		1			
A03	191V01-2	+ BIT2-137 SET		1			
A04	821551-8	CONNECTOR PLASTIC CASE (TYP E3)		1			
C10	453974-8	LATCH		4			
A05	835Y86-3	INNER TRAY		1			
A06	8041X7-0	DFR452RTJ INDICATION LABEL		1			
A07	8041X8-8	DFR452RTJ PLASTIC CASE LABEL		2	*		
A08	***DC18RC	DC18RC FAST CHARGER		1			
A08		COMPO-PARTS					
A09	197280-8	BATTERY BL1850B SET		2			
A10	450128-8	BATTERY COVER		2			
F01	191V01-2	+ BIT2-137 SET		1			
F02	191V03-8	SQUARE BIT 2-137 SET		1			
F03	191V05-4	POZIDRIVE BIT 2-137 SET		1			
F04	191W93-7	CASING 41 SET		1	*		
F04-1	191W93-7	CASING 41 SET	O	1	*		
F04-2	1915G8-5	CASING 41 SET	O	1			